LINO 3418122-3418127

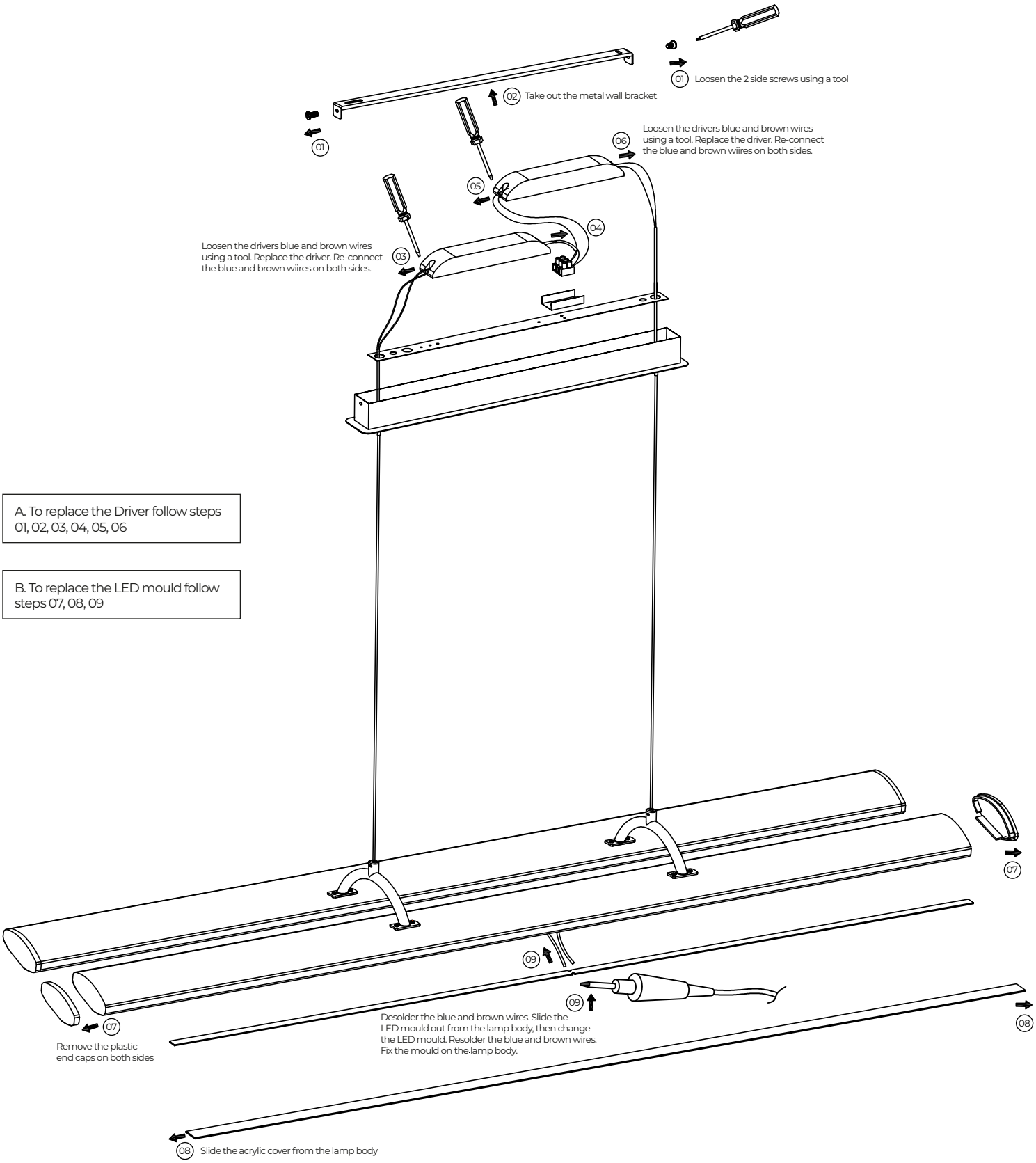

A. To replace the Driver follow steps 01, 02, 03, 04, 05, 06

B. To replace the LED mould follow steps 07, 08, 09